General Certificate of Education
Advanced Level Examination
June 2012

Mathematics MM2B

Unit Mechanics 2B

Thursday 21 June 2012 1.30 pm to 3.00 pm

For this paper you must have:
- the blue AQA booklet of formulae and statistical tables.

You may use a graphics calculator.

Time allowed
- 1 hour 30 minutes

Instructions
- Use black ink or black ball-point pen. Pencil should only be used for drawing.
- Fill in the boxes at the top of this page.
- Answer **all** questions.
- Write the question part reference (eg (a), (b)(i) etc) in the left-hand margin.
- You must answer each question in the space provided for that question. If you require extra space, use an AQA supplementary answer book; do **not** use the space provided for a different question.
- Do not write outside the box around each page.
- Show all necessary working; otherwise marks for method may be lost.
- Do all rough work in this book. Cross through any work that you do not want to be marked.
- The **final** answer to questions requiring the use of calculators should be given to three significant figures, unless stated otherwise.
- Take $g = 9.8\,\mathrm{m\,s^{-2}}$, unless stated otherwise.

Information
- The marks for questions are shown in brackets.
- The maximum mark for this paper is 75.

Advice
- Unless stated otherwise, you may quote formulae, without proof, from the booklet.
- You do not necessarily need to use all the space provided.

1 Alan, of mass 76 kg, performed a ski jump. He took off at the point A at the end of the ski run with a speed of $28\,\mathrm{m\,s^{-1}}$ and landed at the point B.

The level of the point B is 31 metres vertically below the level of the point A, as shown in the diagram.

Assume that his weight is the only force that acted on Alan during the jump.

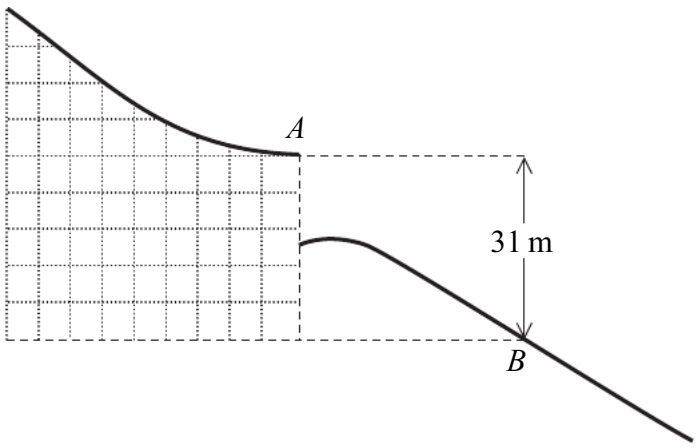

(a) Calculate the kinetic energy of Alan when he was at the point A. *(2 marks)*

(b) Calculate the potential energy lost by Alan during the jump as he moved from the point A to the point B. *(2 marks)*

(c) (i) Find the kinetic energy of Alan when he reached the point B. *(2 marks)*

(ii) Hence find the speed of Alan when he reached the point B. *(2 marks)*

---

2 A particle moves in a straight line. At time t seconds, it has velocity $v\,\mathrm{m\,s^{-1}}$, where

$$v = 6t^2 - 2\mathrm{e}^{-4t} + 8$$

and $t \geqslant 0$.

(a) (i) Find an expression for the acceleration of the particle at time t. *(2 marks)*

(ii) Find the acceleration of the particle when $t = 0{:}5$. *(2 marks)*

(b) The particle has mass 4 kg.

Find the magnitude of the force acting on the particle when $t = 0{:}5$. *(1 mark)*

(c) When $t = 0$, the particle is at the origin.

Find an expression for the displacement of the particle from the origin at time t. *(4 marks)*

3 A uniform rectangular lamina $ABCD$, of mass 1.6 kg, has side AB of length 12 cm and side BC of length 8 cm.

To create a logo, a uniform circular lamina, of mass 0.4 kg, is attached. The centre of the circular lamina is at the point C, as shown in the diagram.

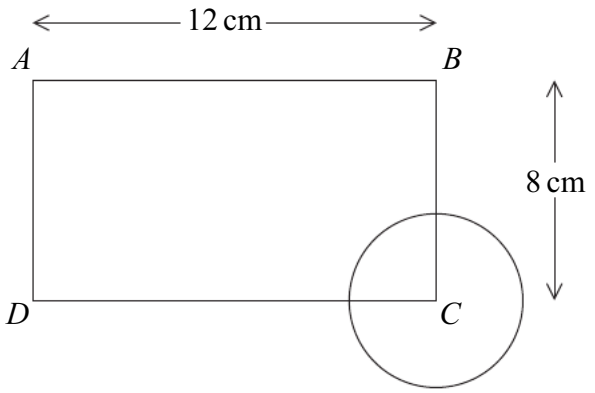

(a) Find the distance of the centre of mass of the logo:

(i) from the line AB; *(3 marks)*

(ii) from the line AD. *(3 marks)*

(b) The logo is suspended in equilibrium, with AB horizontal, by two vertical strings. One string is attached at the point A and the other string is attached at the point B.

Find the tension in each of the two strings. *(5 marks)*

---

4 A particle moves on a horizontal plane, in which the unit vectors $\mathbf{i}$ and $\mathbf{j}$ are perpendicular.

At time t, the particle's position vector, $\mathbf{r}$, is given by

$$\mathbf{r} = 4\cos 3t\,\mathbf{i} - 4\sin 3t\,\mathbf{j}$$

(a) Prove that the particle is moving on a circle, which has its centre at the origin. *(2 marks)*

(b) Find an expression for the velocity of the particle at time t. *(2 marks)*

(c) Find an expression for the acceleration of the particle at time t. *(2 marks)*

(d) The acceleration of the particle can be written as

$$\mathbf{a} = k\mathbf{r}$$

where k is a constant.

Find the value of k. *(2 marks)*

(e) State the direction of the acceleration of the particle. *(1 mark)*

---

5 Two particles, A and B, are connected by a light inextensible string which passes through a hole in a smooth horizontal table. The edges of the hole are also smooth. Particle A, of mass 1.4 kg, moves, on the table, with constant speed in a circle of radius 0.3 m around the hole. Particle B, of mass 2.1 kg, hangs in equilibrium under the table, as shown in the diagram.

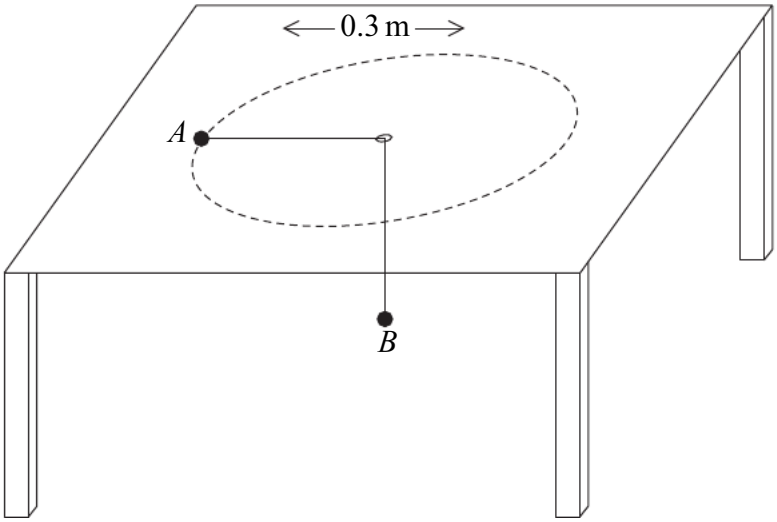

(a) Find the angular speed of particle A. *(4 marks)*

(b) Find the speed of particle A. *(2 marks)*

(c) Find the time taken for particle A to complete one full circle around the hole. *(2 marks)*

6 Simon, a small child of mass 22 kg, is on a swing. He is swinging freely through an angle of 18° on both sides of the vertical. Model Simon as a particle, P, of mass 22 kg, attached to a fixed point, Q, by a light inextensible rope of length 2.4 m.

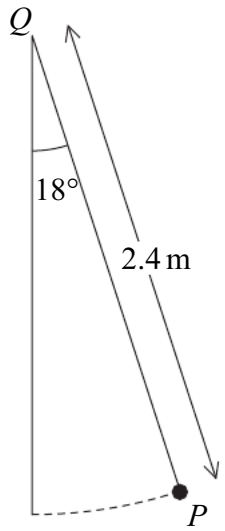

(a) Find Simon's maximum speed as he swings. *(4 marks)*

(b) Calculate the tension in the rope when Simon's speed is a maximum. *(3 marks)*

---

7 A stone, of mass 5 kg, is projected vertically downwards, in a viscous liquid, with an initial speed of $7\,\mathrm{m\,s^{-1}}$.

At time t seconds after it is projected, the stone has speed $v\,\mathrm{m\,s^{-1}}$ and it experiences a resistance force of magnitude $9.8v$ newtons.

(a) When $t \geqslant 0$, show that

$$\frac{\mathrm{d}v}{\mathrm{d}t} = -1{:}96(v - 5)$$ *(2 marks)*

(b) Find v in terms of t. *(5 marks)*

8 Zoë carries out an experiment with a block, which she places on the horizontal surface of an ice rink. She attaches one end of a light elastic string to a fixed point, A, on a vertical wall at the edge of the ice rink at the height of the surface of the ice rink.

The block, of mass 0.4 kg, is attached to the other end of the string. The string has natural length 5 m and modulus of elasticity 120 N.

The block is modelled as a particle which is placed on the surface of the ice rink at a point B, where AB is perpendicular to the wall and of length 5.5 m.

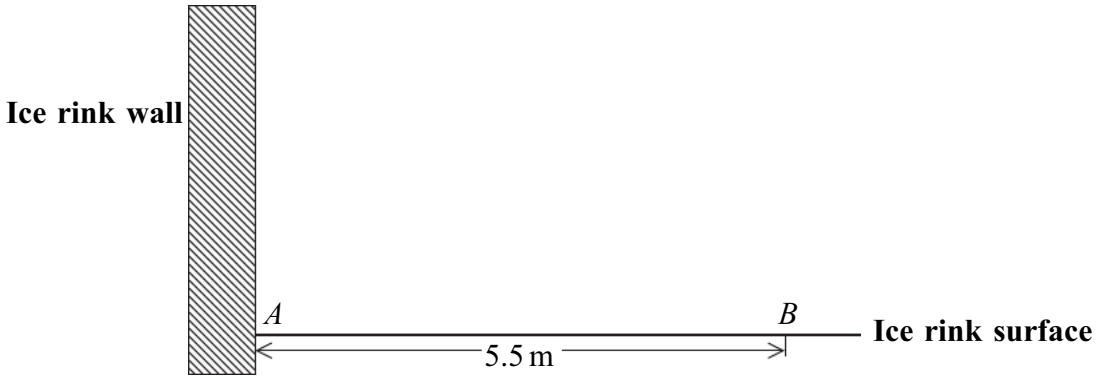

The block is set into motion at the point B with speed $9\,\mathrm{m\,s^{-1}}$ directly towards the point A. The string remains horizontal throughout the motion.

(a) Initially, Zoë assumes that the surface of the ice rink is smooth.

Using this assumption, find the speed of the block when it reaches the point A.

(4 marks)

(b) Zoë now assumes that friction acts on the block. The coefficient of friction between the block and the surface of the ice rink is μ.

(i) Find, in terms of g and μ, the speed of the block when it reaches the point A.

(6 marks)

(ii) The block rebounds from the wall in the direction of the point B. The speed of the block immediately after the rebound is half of the speed with which it hit the wall.

Find μ if the block comes to rest just as it reaches the point B. *(6 marks)*